Dist	COUNTY	ROUTE	POST MILES TOTAL PROJECT	SHEET No.	TOTAL SHEETS
04	SM	82,101	4.8/19.3, 6.6/20.7	194	252

REGISTERED ELECTRICAL ENGINEER 12-05-11 DATE

1-23-12
PLANS APPROVAL DATE

REGISTERED PROFESSIONAL ENGINEER Michael P. Lee No. 13435 Exp. 9-30-12 ELECTRICAL STATE OF CALIFORNIA

THE STATE OF CALIFORNIA OR ITS OFFICERS OR AGENTS SHALL NOT BE RESPONSIBLE FOR THE ACCURACY OR COMPLETENESS OF SCANNED COPIES OF THIS PLAN SHEET.

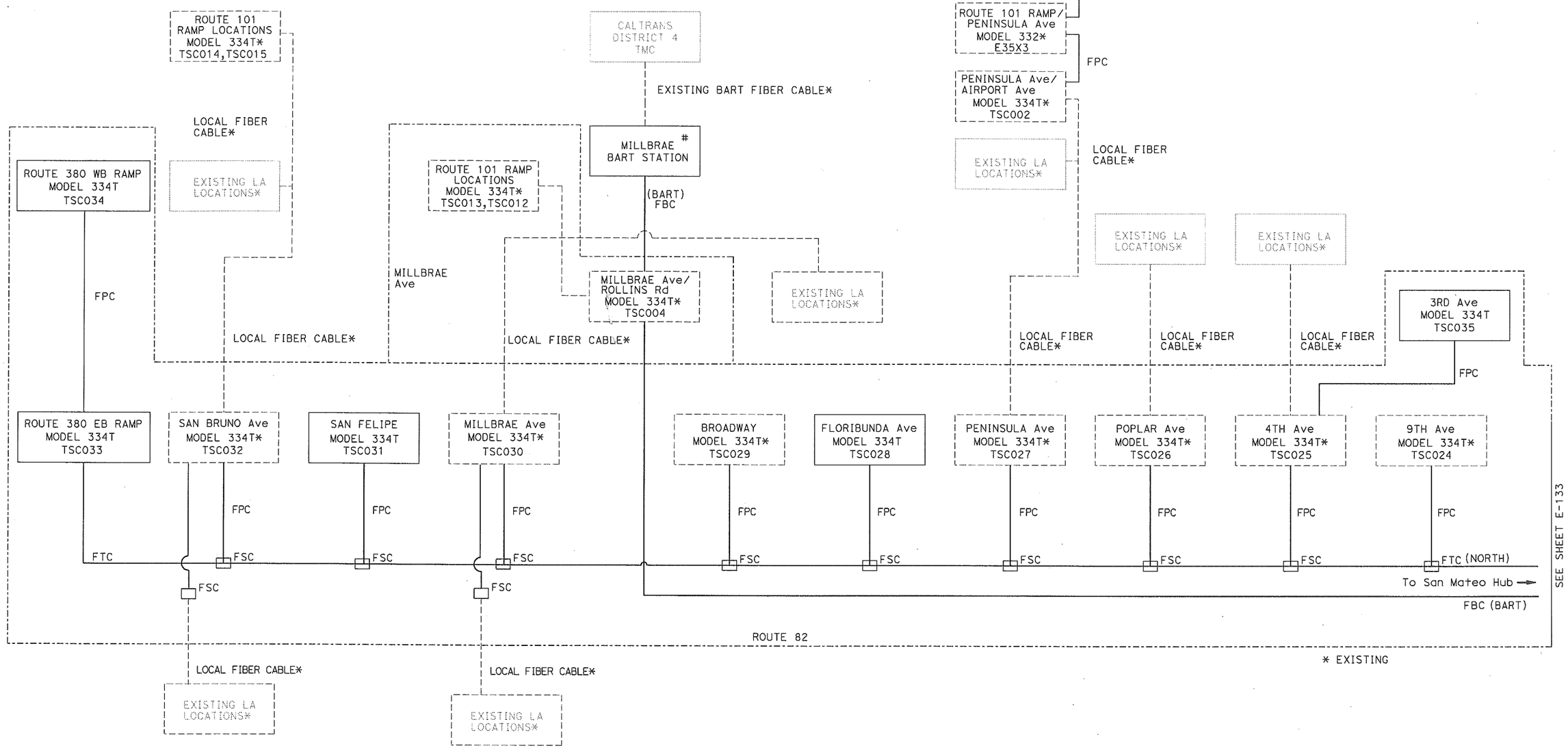

SEE TRAIN CONTROL ROOM ON SHEET E-84

ELECTRICAL DETAILS
FIBER OPTIC SYSTEM
(COMMUNICATIONS SYSTEM LAYOUT)

NO SCALE

E-132

THIS PLAN IS ACCURATE FOR ELECTRICAL WORK ONLY.

FOR NOTES, ABBREVIATIONS AND LEGEND, SEE SHEET E-1 TO E-3.

STATE OF CALIFORNIA - DEPARTMENT OF TRANSPORTATION
Caltrans
ELECTRICAL

FUNCTIONAL SUPERVISOR: CHARLES PRICE
CALCULATED-DESIGNED BY: MICHAEL P. LEE
CHECKED BY: SEAN COUGHLIN
REVISED BY
DATE REVISED

LAST REVISION 11-05-10
DATE PLOTTED => 28-DEC-2011
TIME PLOTTED => 14:56

BORDER LAST REVISED 4/11/2008
RELATIVE BORDER SCALE IS IN INCHES 0 1 2 3
USERNAME => s114640
DGN FILE => 44a923ua132.dgn
CU 04226
EA 4A9231

Dist	COUNTY	ROUTE	POST MILES TOTAL PROJECT	SHEET No.	TOTAL SHEETS
04	SM	82,101	4.8/19.3, 6.6/20.7	195	252

REGISTERED ELECTRICAL ENGINEER 12-05-11 DATE

1-23-12
PLANS APPROVAL DATE

REGISTERED PROFESSIONAL ENGINEER Michael P. Lee No. 13435 Exp. 9-30-12 ELECTRICAL STATE OF CALIFORNIA

THE STATE OF CALIFORNIA OR ITS OFFICERS OR AGENTS SHALL NOT BE RESPONSIBLE FOR THE ACCURACY OR COMPLETENESS OF SCANNED COPIES OF THIS PLAN SHEET.

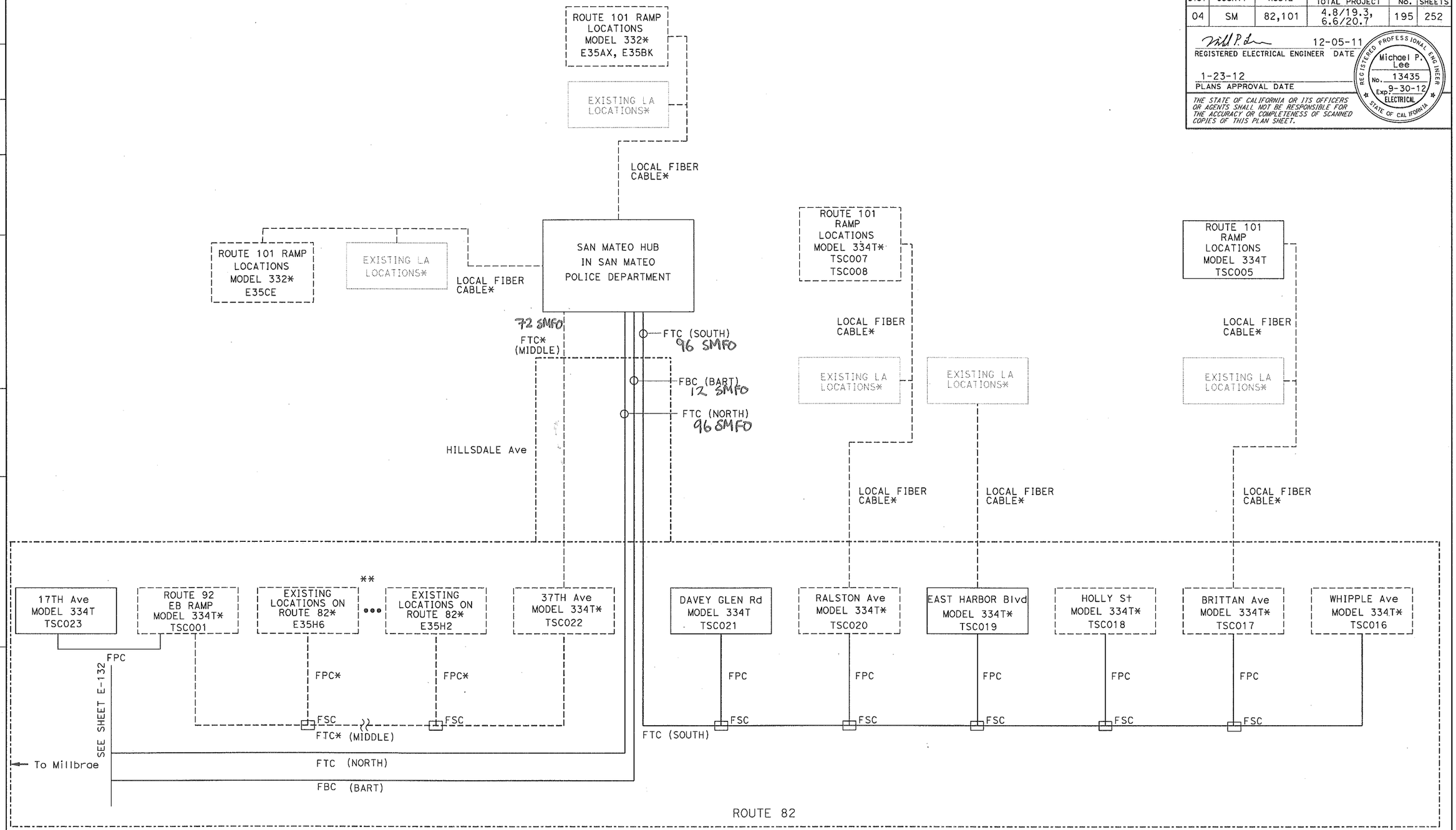

** INSTALL COMMUNICATION EQUIPMENT IN CABINETS SHOWN ON E-160.

* EXISTING

THIS PLAN IS ACCURATE FOR ELECTRICAL WORK ONLY.

FOR NOTES, ABBREVIATIONS AND LEGEND, SEE SHEET E-1 TO E-3.

ELECTRICAL DETAILS
FIBER OPTIC SYSTEM
(COMMUNICATIONS SYSTEM LAYOUT)

NO SCALE

E-133

STATE OF CALIFORNIA - DEPARTMENT OF TRANSPORTATION
Caltrans
ELECTRICAL

FUNCTIONAL SUPERVISOR: CHARLES PRICE
CALCULATED-DESIGNED BY: MICHAEL P. LEE
CHECKED BY: SEAN COUGHLIN
REVISED BY
DATE REVISED

LAST REVISION 11-05-10
DATE PLOTTED => 19-DEC-2011
TIME PLOTTED => 13:53

BORDER LAST REVISED 4/11/2008
RELATIVE BORDER SCALE IS IN INCHES 0 1 2 3
USERNAME => s113946
DGN FILE => 44a923ua133.dgn
CU 04226
EA 4A9231

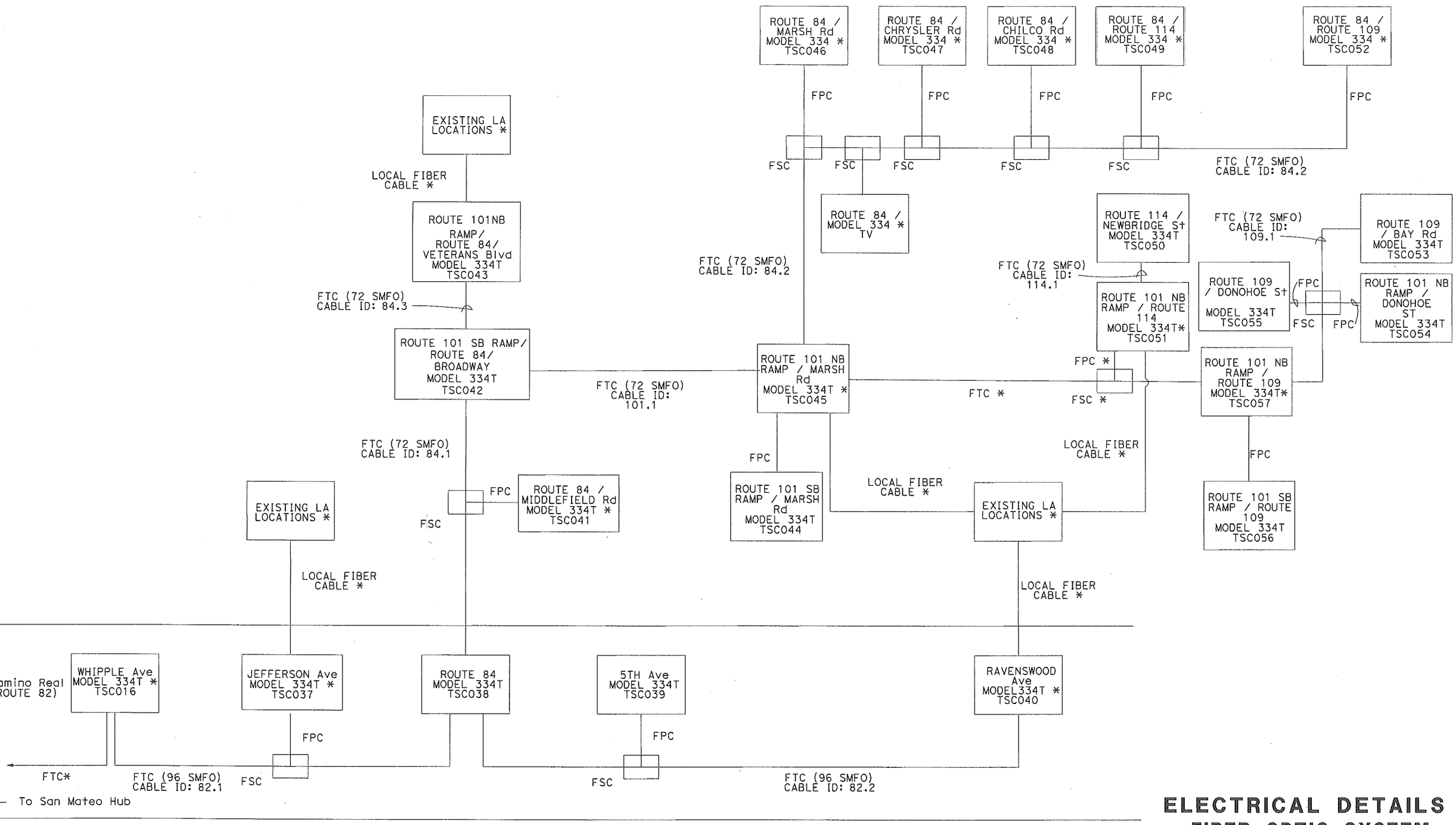

ELECTRICAL DETAILS
FIBER OPTIC SYSTEM